SLOAN 180 ESS-1.5-HW

CODE NUMBER

3772449

DESCRIPTION

1.5 gpf, Polished Chrome Finish, Single Flush, Hardwired, Sensor-Operated, Sloan® Exposed Sensor Hardwired Urinal Flushometer.

DETAILS

- Flush Volume: 1.5 gpf (5.7 Lpf)
- Finish: Polished Chrome (CP)
- Power Type: Hardwired (HW)
- Battery Life: 6 years
- Valve: Diaphragm
- Valve Body Material: Semi-red Brass
- Fixture Type: Urinal
- Fixture Connection: Top spud
- Rough-In Dimension: 11 ½" (292mm)
- Spud Coupling: 1 ¼" (32mm)
- Supply Pipe: 1" (25mm)

FEATURES

- Flush volumes start as low as 1.0 gpf/3.8 Lpf
- Water conservation is aided by the ADA-compliant, non-hold-open handle, which prevents urinal from exceeding intended flush volume
- Flush accuracy is controlled by CID™ technology, also enhancing water efficiency
- Integrity of the product is maintained with the vandal-resistant stop cap
- Durability is facilitated with high copper, low zinc brass castings for dezincification resistance
- Adjustable tailpiece to accommodate different height requirements
- High chloramine resistant PERMEX synthetic rubber diaphragm with Linear Filtered Bypass and Vortex Cleansing Action
- Valve body, Cover, Tailpiece and Control Stop shall be in compliance with ASTM Alloy Classification for Semi-Red Brass
- Valve shall be in compliance to the applicable sections of ASSE 1037.

VIDEOS

ESS Flushometer

COMPLIANCES & CERTIFICATIONS

(UL Certified, ADA Compliant, cUPC Certified, BAA Compliant)

RECOMMENDED SPECIFICATION

Valve Body, Cover, Tailpiece and Control Stop shall be in conformance with ASTM Alloy Classification for Semi- Red Brass. Valve shall be in compliance with the applicable sections of ASSE 1037 and ANSI/ASME 112.19.2.

ELECTRICAL SPECIFICATIONS

- Arming Delay: 8 seconds
- Battery Life: 6 years

VALVE OPERATING PRESSURE (FLOWING)

15–80 PSI (103–552 kPa). Specific fixtures may require greater minimum flowing pressure - consult manufacturer requirements.

DOWNLOADS

- Sloan Exposed Installation Instructions
- Sloan Exposed (Spanish) Installation Instructions
- Sloan Concealed Installation Instructions
- Control Stop Repair and Maintenance Guide
- Flush Connections Flanges Repair and Maintenance Guide
- Tail Piece Repair and Maintenance Guide
- Sloan Flushometer Repair and Maintenance Guide
- Sloan/Regal ESS Repair and Maintenance Guide
- Optima ESS Repair and Maintenance Guide
- Additional Downloads

NOTES

All information contained within this document subject to change without notice.

Looking for other variations of the SLOAN 180 ESS product?
View the general spec sheet with all options.

Find a compatible urinal for this flushometer.
Find a compatible water closet for this flushometer.

Sloan 10500 Seymour Ave, Franklin Park, IL 60131
Phone: 800.982.5839 • Fax: 800.447.8329 • sloan.com

ROUGH-IN

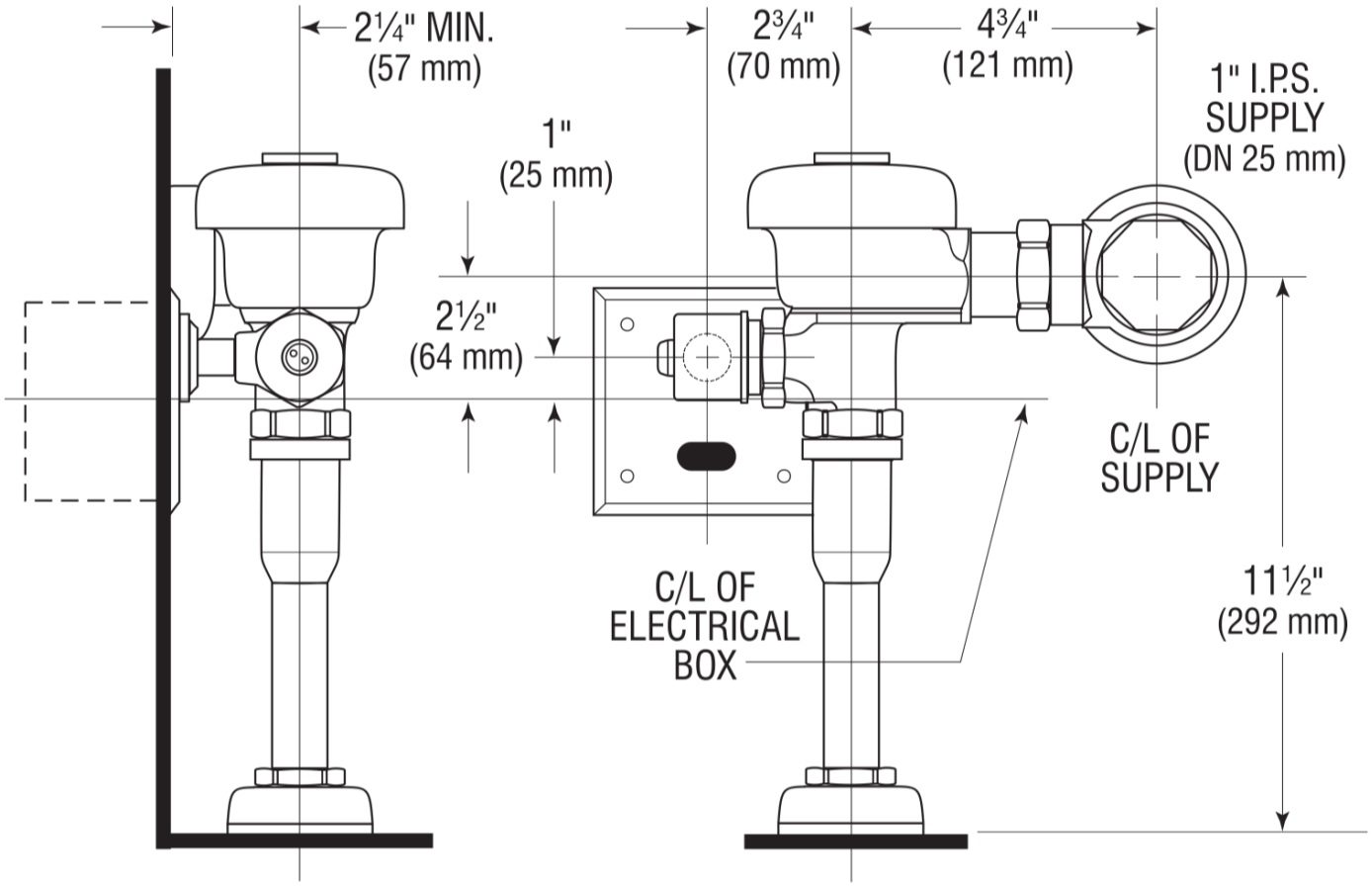

Sloan 10500 Seymour Ave, Franklin Park, IL 60131
Phone: 800.982.5839 • Fax: 800.447.8329 • sloan.com